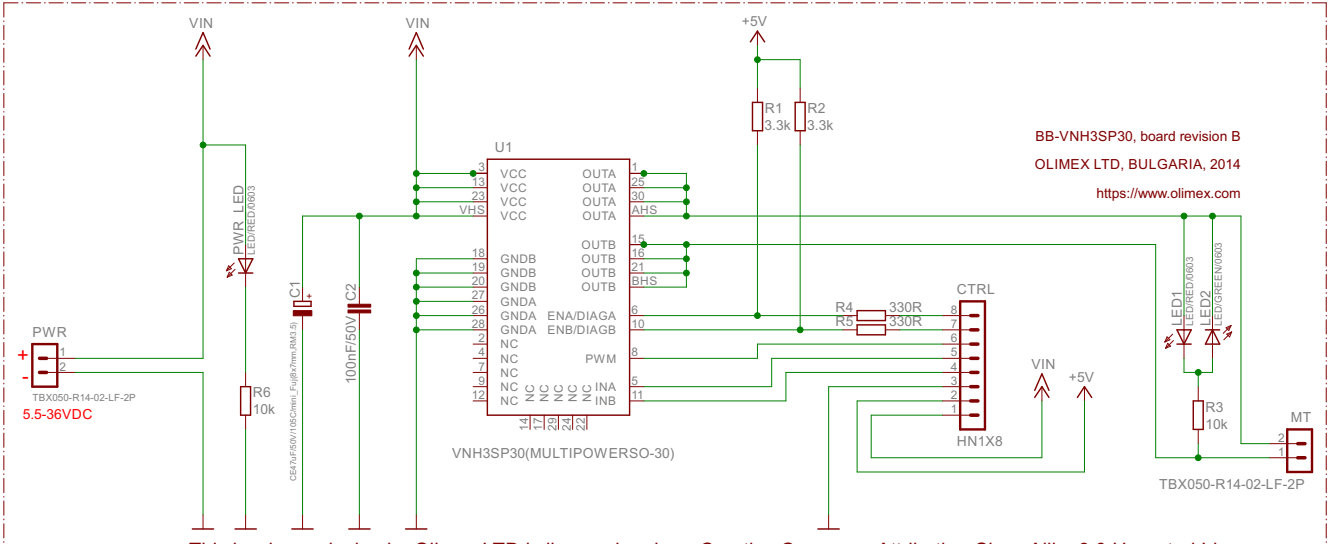

This hardware design by Olimex LTD is licensed under a Creative Commons Attribution-ShareAlike 3.0 Unported License.

FULLY INTEGRATED H-BRIDGE MOTOR DRIVER